# LED Mirror Light - LM-ML001A/B/ML003



## Features

- The fixture features a metal base and a PC diffuser lampshade with no visible screw.
- It is available in brushed nickel, black, and gloden finishes.
- Three luminous body shapes are available: cylindrical, square, and single-head cylindrical. Sizes include 18"", 24"", 36"", and 48"" to suit different venue needs.
- 5 CCT: 2700K/3000K/3500K/4000K/5000K.
- Universal voltage AC120V-277V.
- Support TRIAC dimming.
- Rated in damp location.

## Technical specifications



ML001A/B-18"/24"/36"/48"



ML003-13"



Silver Black Gloden



ML001A



ML001B

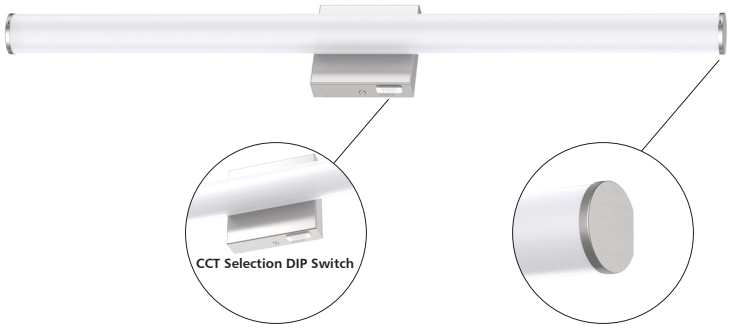

# LED Mirror Light - LM-ML001A/B/ML003

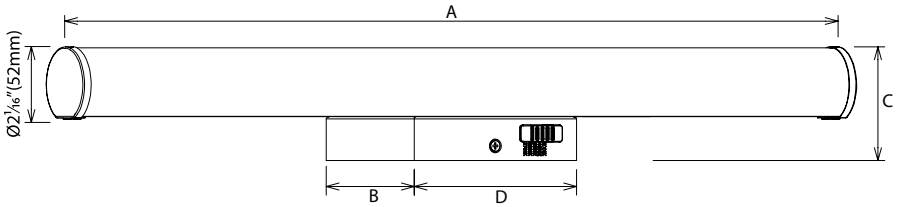


## Performance Summary

| Model NO. | Size (inch) | | | | Watts | CCT | Efficacy | Lumens (±10%) | Voltage | DIM | CRI | Beam Angle |
|---|---|---|---|---|---|---|---|---|---|---|---|---|
| | A | B | C | D | | | | | | | | |
| LM-ML001A-18-13W-DC5 | 18 | 4 3/4 | 3 1/16 | 5 1/16 | 13W | 5CCT Selectable 2700K+3000K+3500K+ 4000K+5000K | 115-125lm/W | 1500-1700lm | AC120-277V | AC120V: Triac AC120-277V: On/Off | 90 | 140° |
| LM-ML001A-24-16W-DC5 | 24 | 4 3/4 | 3 1/16 | 5 1/16 | 16W | | 115-125lm/W | 1800-2000lm | | | | |
| LM-ML001A-36-25W-DC5 | 36 | 4 3/4 | 3 1/16 | 5 1/16 | 25W | | 115-125lm/W | 2800-3100lm | | | | |
| LM-ML001A-48-32W-DC5 | 48 | 4 3/4 | 3 1/16 | 5 1/16 | 32W | | 115-120lm/W | 3600-3900lm | | | | |

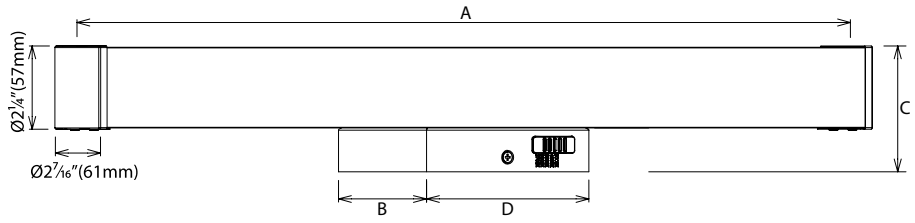


## Performance Summary

| Model NO. | Size (inch) | | | | Watts | CCT | Efficacy | Lumens (±10%) | Voltage | DIM | CRI | Beam Angle |
|---|---|---|---|---|---|---|---|---|---|---|---|---|
| | A | B | C | D | | | | | | | | |
| LM-ML001B-18-13W-DC5 | 18 | 4 3/4 | 3 3/8 | 5 1/16 | 13W | 5CCT Selectable 2700K+3000K+3500K+ 4000K+5000K | 110-125lm/W | 1400-1700lm | AC120-277V | AC120V: Triac AC120-277V: On/Off | 90 | 137° |
| LM-ML001B-24-16W-DC5 | 24 | 4 3/4 | 3 3/8 | 5 1/16 | 16W | | 110-125lm/W | 1700-2000lm | | | | |
| LM-ML001B-36-25W-DC5 | 36 | 4 3/4 | 3 3/8 | 5 1/16 | 25W | | 110-120lm/W | 2700-3000lm | | | | |
| LM-ML001B-48-32W-DC5 | 48 | 4 3/4 | 3 3/8 | 5 1/16 | 32W | | 110-120lm/W | 3500-3800lm | | | | |

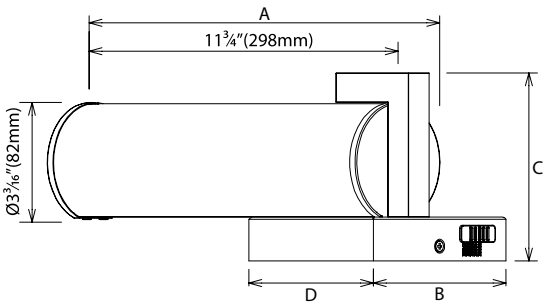


## Performance Summary

| Model NO. | Size (inch) | | | | Watts | CCT | Efficacy | Lumens (±10%) | Voltage | DIM | CRI | Beam Angle |
|---|---|---|---|---|---|---|---|---|---|---|---|---|
| | A | B | C | D | | | | | | | | |
| LM-ML003-13-10W-DC5 | 13 5/16 | 5 1/16 | 5 1/16 | 4 3/4 | 10W | 5CCT Selectable 2700K+3000K+3500K+ 4000K+5000K | 100-110lm/W | 900-1100lm | AC120-277V | AC120V: Triac AC120-277V: On/Off | 90 | 175° |

# LED Mirror Light - LM-ML001A/B/ML003

## Technical specifications

### Materials

| | |
|---|---|
| Housing: | Metal |
| Optic: | PC |

### Electrical

| | |
|---|---|
| Rated voltage: | 120-277V |
| Frequency: | 50/60Hz |
| Power factor: | >0.9 |
| Constant voltage: | - |

### Environmental

| | |
|---|---|
| Life time: | >50,000Hrs |
| operating temp: | -4°F to 113°F (-20°C to 45°C) |
| storage temp: | -4°F to 149°F(-20°C to 65°C) |
| Location rating: | Damp location |

### Compatible

| | |
|---|---|
| Dimming compatible controls: | - |
| Track Type compatible: | - |

## Packing Info

| Size | Product Weight (Lbs) | | Package Weight (Lbs) | | Q'ty/BOX (PCS) | Q'ty/CTN (PCS) | Carton Size(inch) | 20GP (PCS) | 40HQ (PCS) |
|---|---|---|---|---|---|---|---|---|---|
| | N.W/PC | G.W/PC | N.W/CTN | G.W/CTN | | | | | |
| LM-ML001A-18-13W-DC5 | 1.25 | 1.74 | 7.51 | 11.93 | 1 | 6 | 18⅞*10⅝*11 | 4752 | 10692 |
| LM-ML001A-24-16W-DC5 | 1.35 | 1.94 | 8.11 | 13.42 | 1 | 6 | 25*10⅝*11 | 3600 | 8208 |
| LM-ML001A-36-25W-DC5 | 1.63 | 2.46 | 9.79 | 17.12 | 1 | 6 | 37*10⅝*11 | 2304 | 5400 |
| LM-ML001A-48-32W-DC5 | 1.82 | 2.90 | 10.91 | 20.27 | 1 | 6 | 49*10⅝*11 | 1680 | 3996 |
| LM-ML001B-18-13W-DC5 | 1.46 | 1.93 | 8.77 | 13.12 | 1 | 6 | 18⅞*10⅝*12 3⁄16 | 4158 | 9504 |
| LM-ML001B-24-16W-DC5 | 1.60 | 2.20 | 9.62 | 15.01 | 1 | 6 | 25*10⅝*12 3⁄16 | 3150 | 7296 |
| LM-ML001B-36-25W-DC5 | 1.95 | 2.79 | 11.71 | 19.17 | 1 | 6 | 37*10⅝*12 3⁄16 | 2016 | 4800 |
| LM-ML001B-48-32W-DC5 | 2.25 | 6.48 | 13.49 | 41.85 | 1 | 6 | 49*10⅝*12 3⁄16 | 1470 | 3552 |
| LM-ML003-13-10W-DC5 | 1.51 | 1.95 | 9.03 | 13.55 | 1 | 6 | 18½*15¾*12 | 2856 | 6768 |